Forming a band clamp and operating the C001 Tool

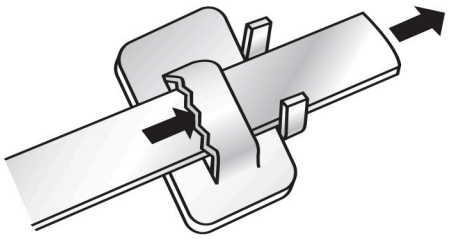

1. Pull appropriate length of band from BAND-IT Tote (approx. 3 1/2 times the diameter of the pole or mastarm for a single-wrapped clamp and seven times the diameter for a double-wrapped clamp.

   Add 152.4-203.2 mm for both single-wrapped and double-wrapped clamps to accommodate the tail and bracket design.) Cut the band using one of the BAND-IT tools with built-in cutter. One end of the band will be very flat and the opposite end will be slightly bent from the cut-off.

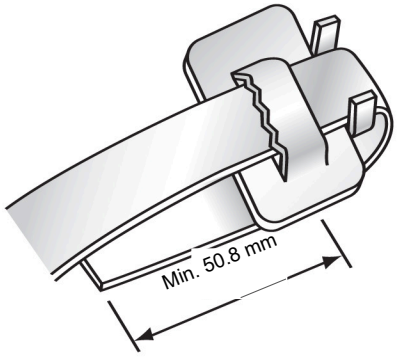

2. Holding the buckle in one hand, with ears pointing upward and to the right as shown, insert the bent or twisted end of the band through the buckle "bridge,"

   past the ears and bend so that at least 50.8 mm are underneath the buckle.

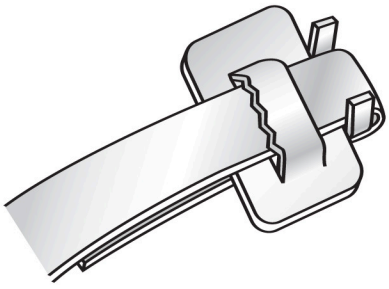

3. Squeeze this "lip wrap" to flatten the bend preventing "pull-out" during tensioning.

4. Wrap band through sign bracket and around the pole or mastarm and thread through bridge as shown.

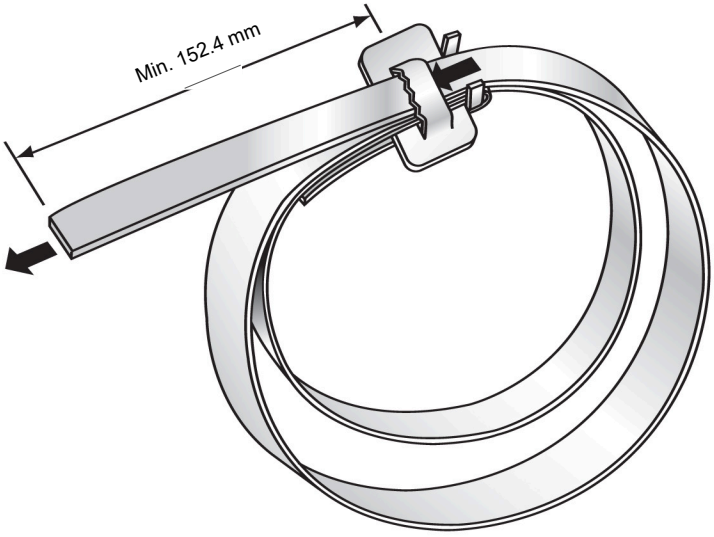

5. Repeat a second wrap of band through the bracket and buckle for a continuous double-wrap application. Double-wrapping develops greater radial compression than single-wrapped clamps and more than doubles the holding strength for heavy objects and high wind loads.

UES Promura | +61 3 9547 5833 | sales@uespromura.com.au
10-12 McWilliam Street, Springvale VIC 3171 | www.uespromura.com.au

Forming a band clamp and operating the Cool Tool

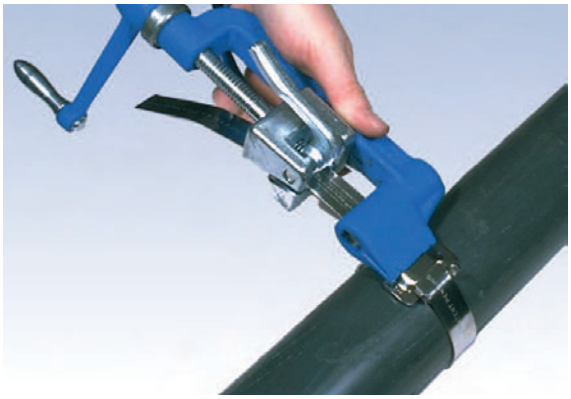

6. Place band in open slot of tool nose and gripper block. Move into slot as far as possible to prevent buckle from sliding into tool nose. With thumb on band gripper lever, apply tension by turning handle of tool. After tension is created, it is no longer necessary to hold the band gripper lever as it locks itself under tension. When band stops moving through buckle, maximum tension has been applied. Stop turning handle.

7. To set the lock and cut off band, roll tool nose over buckle, relieving a slight amount of tension by backing off tension handle during this fold over operation. Failure to back off tension handle throughout the entire course of roll over may result in breaking band. On the other hand, releasing too much tension may result in a loose clamp.

8. Pull cutting handle to cut the band.

9. Remove tool, holding stub of band down with thumb.

10. Hold clamp tail down between ears while hammering the buckle ears down to hold band stub in place. This completes the secure BAND-IT clamp.

Fluted Pole Applications

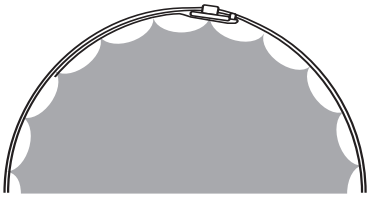

Top View

When tensioning a conventional clamp over a fluted pole, it is necessary to extend the length of the “lip wrap” enough to assure contact with 2 or 3 flute ridges. Also, buckle placement over a ridge is important to provide support for the lock and prevent the “lip wrap” from shifting.